A low pass FIR filter for ECG Denoising in VHDL

In this VHDL project, a simple low pass FIR filter is implemented in VHDL for ECG Denoising. VHDL code for the FIR filter is fully presented.

The VHDL code for the FIR filter is simulated and verified by comparing the simulated results in Modelsim with the correct results generated from Matlab. Sample ECG inputs are provided in input.txt files, the VHDL filter code reads those ECG files, apply digital filtering, and write the results into output.txt files for verification.

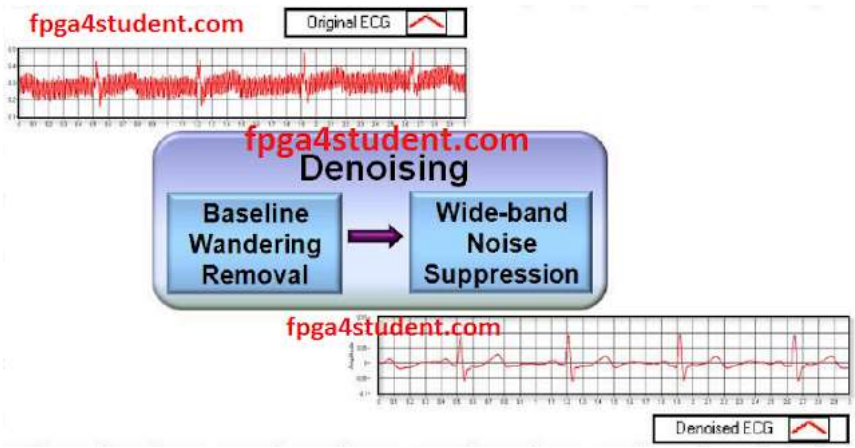

It is obvious that one of the most critical steps in ECG digital signal processing is noise filtering because ECG signals are noisily affected by many different sources such as Baseline Wander, EMG interference, and power line noise. Those noises can be reduced by many filters as shown in the figure above. This project is to implement a low pass FIR Filter in VHDL to reduce high-frequency noise and power-line interference.

The specification of the filter as follows:

- **Order: 10**
- **Tap: 11**
- **8-bit signed integer coefficients as shown below:**

Coefficient	b0	b1	b2	b3	b4	b5	b6	b7	b8	b9	b10
8 bit Integer	-15	-13	7	38	66	78	66	38	7	-13	-15
Hexadecimal	F1	F3	07	26	42	4E	42	26	07	F3	F1

fpga4student.com

In this project, the regular implementation of the FIR filter as shown in the following figure is implemented in VHDL.

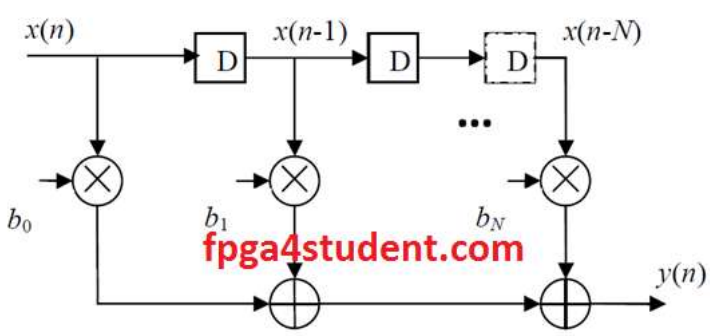

The FIR filter is basically implemented by using D-Flip-Flops, signed multipliers and adders. A basic block includes one N-bit register, one multiplier, and one adder. The VHDL generate statement is used to generate the full design using the basic block.
VHDL code for the low pass FIR filter:

```
Library IEEE;
 USE IEEE.Std_logic_1164.all;
 USE IEEE.Std_logic_signed.all;
 -- fpga4student.com: FPGA projects, VHDL projects, Verilog projects
 -- LOW pass FIR filter for ECG Denoising
 -- VHDL project: VHDL code for FIR filter
 entity FIR_RI is  -- VHDL projects
 generic (
           input_width          : integer     :=8               ;-- set input widt
           output_width     : integer     :=16              ;-- set output width
           coef_width          : integer     :=8               ;-- set coefficient
           tap                     : integer     :=11              ;-- set filter
           guard                : integer     :=0)              ;-- log2(tap)+1
 port(
      Din          : in      std_logic_vector(input_width-1 downto 0)     ;-- inpu
      Clk          : in      std_logic
      reset     : in      std_logic                                          ;-
      Dout     : out      std_logic_vector(output_width-1 downto 0))     ;-- outpu
 end FIR_RI;
 architecture behaivioral of FIR_RI is
 -- N bit Register
 component N_bit_Reg
 generic (
           input_width          : integer     :=8
           );
   port(
    Q : out std_logic_vector(input_width-1 downto 0);
    Clk :in std_logic;
    reset :in std_logic;
    D :in std_logic_vector(input_width-1 downto 0)
   );
 end component;
 -- fpga4student.com: FPGA projects, VHDL projects, Verilog projects
 type Coeficient_type is array (1 to tap) of std_logic_vector(coef_width-1 downto
 ----------------------------------FIR filter coefficients----------------------
 constant coeficient: coeficient_type :=
                              (     X"F1",
                                   X"F3",
                                   X"07",
                                   X"26",
                                   X"42",
                                   X"4E",
                                   X"42",
                                   X"26",
                                   X"07",
                                   X"F3",
                                   X"F1"
                                   );
 ------------------------------------------------------------------------------
 type shift_reg_type is array (0 to tap-1) of std_logic_vector(input_width-1 downt
 signal shift_reg : shift_reg_type;
 type mult_type is array (0 to tap-1) of std_logic_vector(input_width+coef_width-1
 signal mult : mult_type;
 type ADD_type is array (0 to tap-1) of std_logic_vector(input_width+coef_width-1
 signal ADD: ADD_type;
 begin
 -- fpga4student.com: FPGA projects, VHDL projects, Verilog projects
```

```
        shift_reg(0)     <= Din;
           mult(0)<= Din*coeficient(1);
           ADD(0)<= Din*coeficient(1);
           GEN_FIR:
           for i in 0 to tap-2 generate
           begin
                 -- N-bit reg unit
                 N_bit_Reg_unit : N_bit_Reg generic map (input_width => 8)
                 port map ( Clk => Clk,
                                   reset => reset,
                                   D => shift_reg(i),
                                   Q => shift_reg(i+1)
                                   );
                -- filter multiplication
                mult(i+1)<= shift_reg(i+1)*coeficient(i+2);
                -- filter conbinational addition
                ADD(i+1)<=ADD(i)+mult(i+1);
           end generate GEN_FIR;
           Dout <= ADD(tap-1);
end Architecture;

Library IEEE;
USE IEEE.Std_logic_1164.all;

-- fpga4student.com: FPGA projects, VHDL projects, Verilog projects
-- LOW pass FIR filter for ECG Denoising
-- VHDL project: VHDL code for FIR filter
-- N-bit Register in VHDL
entity N_bit_Reg is
generic (
           input_width          : integer     :=8
           );
  port(
   Q : out std_logic_vector(input_width-1 downto 0);
   Clk :in std_logic;
   reset :in std_logic;
   D :in std_logic_vector(input_width-1 downto 0)
  );
end N_bit_Reg;
 -- fpga4student.com: FPGA projects, VHDL projects, Verilog projects
architecture Behavioral of N_bit_Reg is
begin
     process(Clk,reset)
     begin
          if (reset = '1') then
                Q <= (others => '0');
       elsif ( rising_edge(Clk) ) then
                Q <= D;
      end if;
     end process;
end Behavioral;
```

Testbench VHDL code for the FIR filter:

```
Library IEEE;
USE IEEE.Std_logic_1164.all;
USE IEEE.numeric_std.all;
Use STD.TEXTIO.all;
 -- fpga4student.com: FPGA projects, VHDL projects, Verilog projects
 -- VHDL project: VHDL code for FIR filter
 -- Testbench VHDL code for FIR Filter
entity TB_FIR is
end TB_FIR;
architecture behaivioral of TB_FIR is
Component FIR_RI is
```

```
generic (
          input_width          : integer     :=8               ; -- set input wid
          output_width     : integer     :=16              ; -- set output width
          coef_width          : integer     :=8               ; -- set coefficien
          tap                    : integer     :=11              ; -- set filter
          guard               : integer     :=4)                ; -- log2(tap
port(
     Din          : in      std_logic_vector(input_width-1 downto 0)     ;     --
     Clk          : in      std_logic                                    ;
     reset     : in      std_logic                                      ;
     Dout     : out      std_logic_vector(output_width-1 downto 0))     ;-- outpu
end Component;
signal Din          :      std_logic_vector(7 downto 0)     ;
signal Clk          :      std_logic:='0'                                ;
signal reset     :      std_logic:='1'                                  ;
signal output_ready     :      std_logic:='0';
signal Dout          :      std_logic_vector(15 downto 0)     ;
signal input: std_logic_vector(7 downto 0);
file my_input : TEXT open READ_MODE is "input101.txt";
file my_output : TEXT open WRITE_MODE is "output101_functional_sim.txt";
begin
  -- fpga4student.com: FPGA projects, VHDL projects, Verilog projects
  FIR_int : FIR_RI
          generic map(
                         input_width          =>     8,
          output_width     =>     16,
          coef_width          =>     8,
          tap                 =>     11,
                         guard               =>     0)
          port map     (
                         Din                    => Din,
                         Clk                    => Clk,
                         reset               => reset,
                         Dout               => Dout
               );
          process(clk)
          begin
          Clk          <= not Clk after 10 ns;
          end process;
          reset     <= '1', '1' after 100 ns, '0' after 503 ns;
    -- fpga4student.com: FPGA projects, VHDL projects, Verilog projects
    -- Writing output result to output file
          process(clk)
          variable my_input_line : LINE;
          variable input1: integer;
          begin
               if reset ='1' then
                    Din <= (others=> '0');
                    input <= (others=> '0');
                    output_ready <= '0';
               elsif rising_edge(clk) then
                    readline(my_input, my_input_line);
                    read(my_input_line,input1);
                    Din <= std_logic_vector(to_signed(input1, 8));
                    --Din<=input(7 downto 0);
                    output_ready <= '1';
               end if;
          end process;
          process(clk)
          variable my_output_line : LINE;
          variable input1: integer;
          begin
               if falling_edge(clk) then
                    if output_ready ='1' then
                         write(my_output_line, to_integer(signed(Dout)));
                         writeline(my_output,my_output_line);
                    end if;
               end if;
          end process;

end Architecture;
```

After running simulations in Modelsim, the filtered output is written into output.txt for verification. The verification is done by comparing the output file with the correct result generated from Matlab.

Download sample inputs and output from Matlab

Recommended VHDL projects:

1. What is an FPGA? How VHDL works on FPGA
2. VHDL code for FIFO memory
3. VHDL code for FIR Filter
4. VHDL code for 8-bit Microcontroller
5. VHDL code for Matrix Multiplication
6. VHDL code for Switch Tail Ring Counter
7. VHDL code for digital alarm clock on FPGA
8. VHDL code for 8-bit Comparator
9. How to load a text file into FPGA using VHDL
10. VHDL code for D Flip Flop
11. VHDL code for Full Adder
12. PWM Generator in VHDL with Variable Duty Cycle
13. VHDL code for ALU
14. VHDL code for counters with testbench
15. VHDL code for 16-bit ALU
16. Shifter Design in VHDL
17. Non-linear Lookup Table Implementation in VHDL
18. Cryptographic Coprocessor Design in VHDL
19. Verilog vs VHDL: Explain by Examples
20. **VHDL Code for Clock Divider on FPGA**
21. How to generate a clock enable signal instead of creating another clock domain
22. VHDL code for debouncing buttons on FPGA
23. VHDL code for Traffic light controller
24. VHDL code for a simple 2-bit comparator
25. VHDL code for a single-port RAM
22. VHDL code for debouncing buttons on FPGA
23. VHDL code for Traffic light controller
24. VHDL code for a simple 2-bit comparator
25. VHDL code for a single-port RAM
26. VHDL code for Car Parking System using FSM
27. VHDL coding vs Software Programming
28. VHDL code for MIPS Processor
29. VHDL code for Moore FSM Sequence Detector
30. VHDL code for Seven-Segment Display on Basys 3 FPGA

DMCA PROTECTED

Privacy Policy | Disclaimer | Sitemap | Contact | Advertise Here
Copyright © 2016-2020 FPGA4student.com All Rights Reserved.